Trussbilt, LLC
Combination Lavatory/Toilet Firestop System
Detail No. P8-3

Investigated by Intertek for compliance with applicable requirements. For use with Trussbilt's Fire Rated Wall Panel System TBL/MWP 120-01.

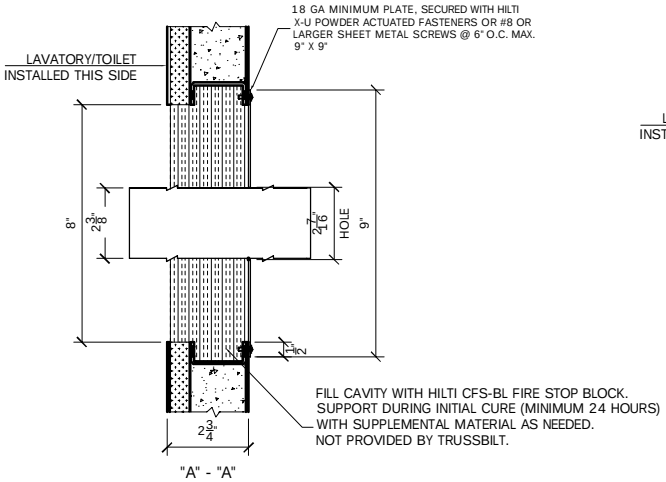

"A" - "A"

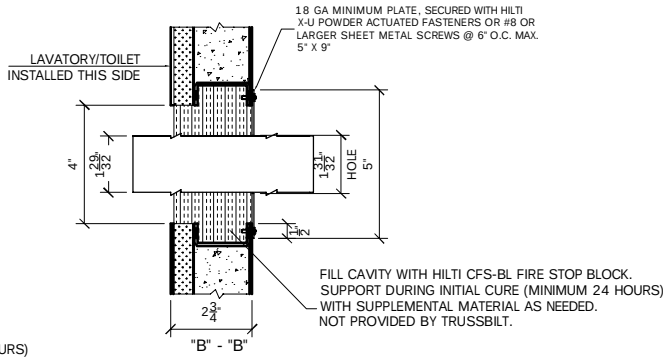

"B" - "B"

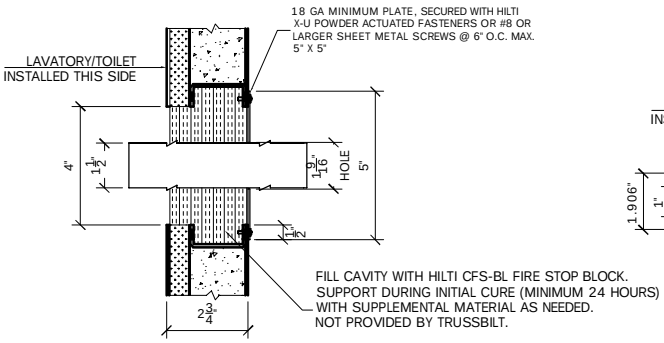

"C" - "C"

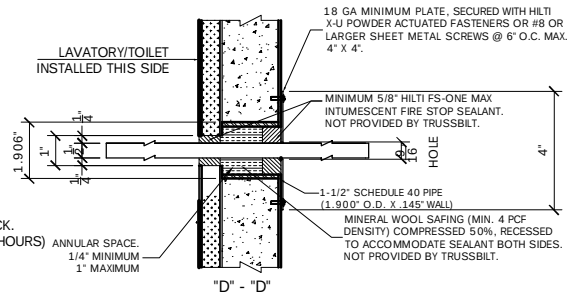

"D" - "D"

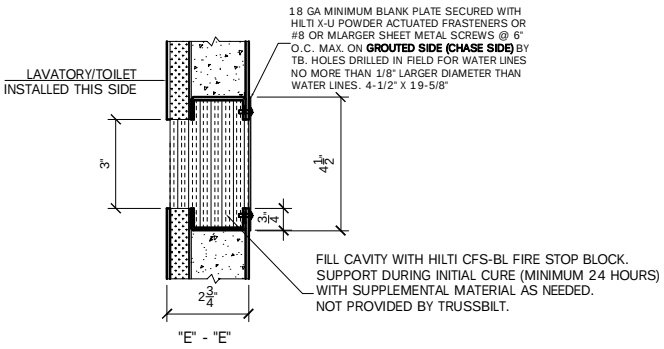

"E" - "E"