James Hardie Building Products
JH/FCS 60-01
James Hardie Fiber Cement Siding
ASTM E119, CAN/ULC S101
Non-Symmetrical, 1 Hour Non-Load-Bearing Wall Assembly (Rating applies to both sides)

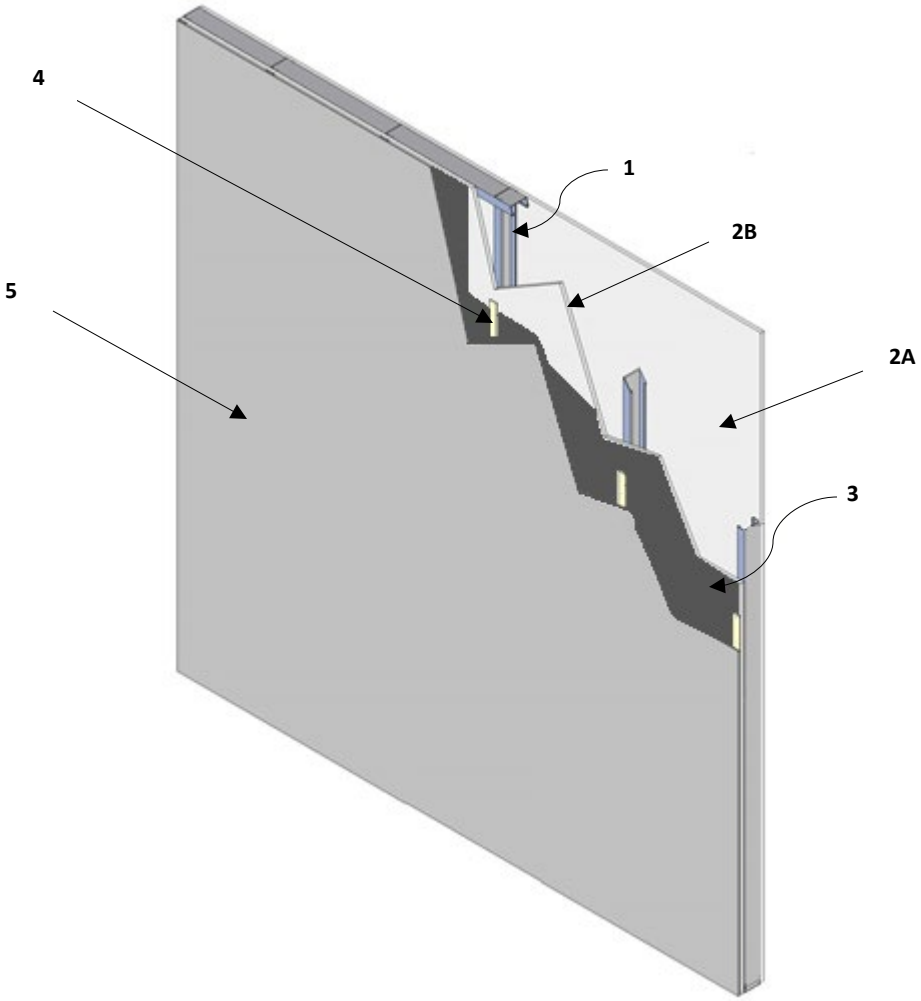

1. **STEEL STUDS:** Min. 3-5/8 in. depth 20 GA (0.0359 in.) galvanized steel studs, spaced 24 in. on center (oc) max.

2. **GYPSUM WALLBOARD, SIDE A:** 5/8 in. Type X gypsum wallboard, oriented vertically and fastened with 1-1/4 in. Type S drywall screws, spaced 8 in. oc at board edges and 12 in. oc in field areas of the board.

   GYPSUM SHEATHING, SIDE B: 1/2 in. Type X or 5/8 in. Type X gypsum sheathing, oriented vertically with edge joints staggered from those of Side A, fastened with 1-1/4 in. Type S drywall screws spaced 24 in. oc.

3. **ADDITIONAL LAYER(S) (Optional):** Any one or two of the following components can be used in any order outward of the gypsum sheathing (Item 2B):

COMPONENT 1 – EXTERIOR INSULATION: The exterior insulation may be installed up to the max. thickness and density recognized in the certification document.

- ICC-ES AC377 certified open cell, spray-applied polyurethane insulation
- ASTM C578 certified extruded polystyrene (XPS) insulation
- ASTM C1289 certified polyiso insulation
- Mineral wool batt insulation

COMPONENT 2 – WOOD STRUCTURAL PANEL SHEATHING:

- Code prescribed wood structural panel sheathing

One layer of the wood structural panel sheathing may also be installed interior of Item 3B.

4. **FURRING (Optional):**
   - Min. 1-1/2 in. wide × 3/8 in. thick furring (Wood: Min. 0.42 s.g.; Metal: Corrosion Resistant min. 20 GA 33 ksi metal hat channel, z-girt or u-bar), or
   - Min. 4.574 in. wide × 3/4 in. thick James Hardie Horizontal Steel Furring installed per manufacturer's installation instructions (min. 18 GA 33 ksi metal)

5. **CERTIFIED MANUFACTURER:** James Hardie Building Products Inc.

   CERTIFIED PRODUCTS: HardiePlank® smooth and textured Lap Siding (HZ5 and HZ10), CemPlank® Lap Siding, Prevail® Lap Siding, HardieShingle® smooth and textured (HZ5 and HZ10), Artisan® Shingle, HardiePanel® Vertical Siding smooth and textured (HZ5 and HZ10), CemPanel® Vertical Siding, Prevail™ Panel Siding, Artisan® Lap Siding, Artisan® V-Groove Siding, Artisan® Bevel Channel, Artisan® Square Channel, Artisan® Shiplap Lap Siding, Reveal®, Hardie® Architectural Panels (textured/ nontextured, HZ5/HZ10), Pressed Reveal®, and Hardie® Plank VL smooth and textured sidings.

   FIBRE-CEMENT EXTERIOR SIDING: HardiePlank® smooth and textured Lap Siding (HZ5 and HZ10), CemPlank® Lap Siding, Prevail® Lap Siding, HardieShingle® smooth and textured (HZ5 and HZ10), Artisan® Shingle, HardiePanel® Vertical Siding smooth and textured (HZ5 and HZ10), CemPanel® Vertical Siding, Prevail™ Panel Siding, Artisan® Lap Siding, Artisan® V-Groove Siding, Artisan® Bevel Channel, Artisan® Square Channel, Artisan® Shiplap Lap Siding, Reveal®, Hardie® Architectural Panels (textured/nontextured, HZ5/HZ10), Pressed Reveal®, or Hardie® Plank VL smooth and textured sidings, installed in accordance with manufacturer's installation instructions.

Consult the listing report on the Directory of Building Products (https://bpdirectory.intertek.com) for the edition of the standard(s) evaluated.

Compliance of the assembly described in this Design Listing with the referenced standard relies on verification that the assembly constructed in the field is consistent with that described herein. Intertek certified products may be verified by the approved Intertek label; other products must be verified by the Authority Having Jurisdiction as meeting the specifications stated herein.