Kingspan Insulation LLC
Design No. KIL/BI 30-02
Kooltherm Insulation Boards
NFPA 285
Rating: Meets Conditions of Acceptance

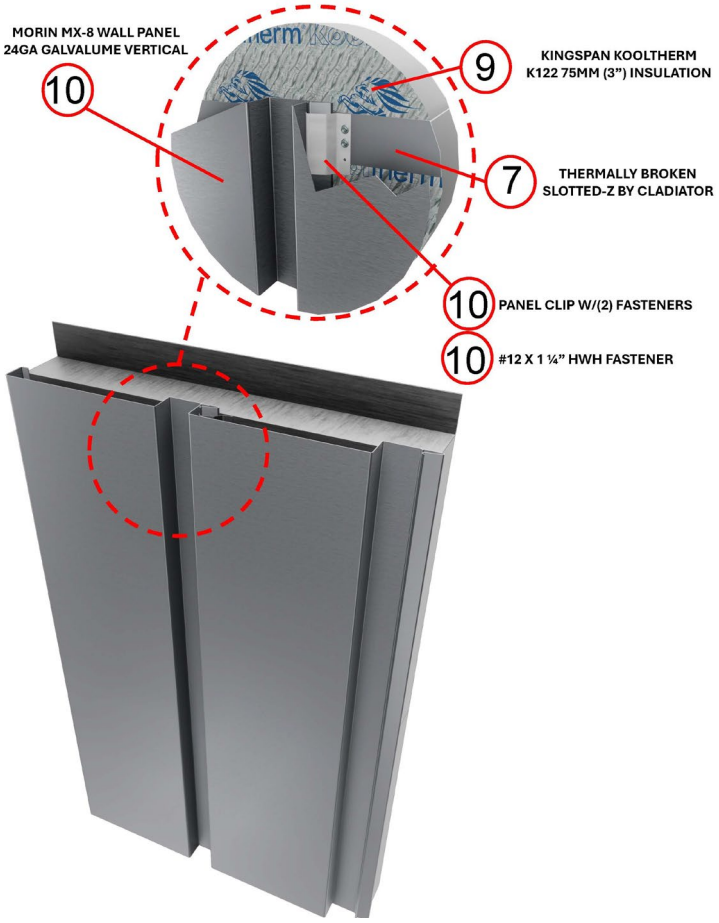

Figure 1 – Wall Construction

1. **INTERIOR FINISH:** Nominal 5/8 in. thick Type X gypsum board complying with ASTM C1396, installed either horizontal or perpendicular to framing, attached with Type S #6 x 1-1/4 in. screws at 8 in. on center (oc) on the perimeter and 12 in. oc in the field. Joints must be taped and covered with joint compound; fastener heads must be covered with joint compound.

2. **FRAMING:** Min. 20 GA, 1.5 in. x 3-5/8 in. steel studs spaced max. 16 in. oc.

3. **FLOORLINE FIRESTOPPING (Not Shown):** Min. 4 pcf mineral wool must be placed into each stud cavity at the floor line for the full depth of the floor thickness.

4. **EXTERIOR SHEATHING:** Nominal 5/8 in. thick Type X gypsum sheathing complying with ASTM C1177, installed either horizontal or perpendicular to framing, attached with #6 x 1-1/4 in. bugle-head, self-drilling screws spaced at 8 in. oc on the perimeter and 12 in. oc in the field.

5. **WEATHER-RESISTIVE BARRIER:** Tremco EXO Air 110 AT, applied in accordance with the manufacturer's instructions.

6. **OPENINGS:** Openings must be framed with min. 20 GA steel. The header must be two layers consisting of 20 GA galvanized steel angle (MK-03) and 24 GA galvalume flashing (MK-02). Window sills must be covered with 24 GA galvalume (MK-01). The MK-03 angle must extend a min. of 43 in. on either side of the opening. See Figures 2 and 3 for component profiles and dimensions.

7. **HORIZONTAL FRAMING:** Thermally Broken Slotted-Z by Cladiator framing members are attached horizontally to vertical framing members with 1.5 in. long Tek 5, 5/16 in. hex-head stainless steel screws, one per stud. Max. vertical spacing is 47-1/4 in. See Figures 4 and 5.

8. **STACK JOINT:** A stack joint consisting of the 24 GA galvanized steel angle (MK-03) with Slotted-Z framing above and below must be located a max. of 27-3/4 in. above openings. The stack joint must extend a min. of 43 in. on either side of the opening. The steel angel must be attached to steel framing members with one 1-1/4 in. x #8 wafer-head screw. See Figure 5.

9. **EXTERIOR INSULATION:**

   CERTIFIED PRODUCT: Kingspan Kooltherm K122 Insulation Boards (CCRR-0166)

   The 3 in. thick insulation boards must be installed between the Slotted-Z framing members and attached to framing with sufficient fasteners to hold the insulation boards in place. Insulation boards must be taped using Nashua 324A insulation tape.

10. **EXTERIOR CLADDING:** Morin MX-8 Wall Cladding Panels (CCRR-0499) must be oriented vertically and must be attached to the Slotted-Z framing members with Matrix Series galvanized clips, which use two 2-1/4 in. #14 screws per clip. See Figures 1, 6, 7 and 8.

Consult the listing report on the Directory of Building Products (https://bpdirectory.intertek.com) for the edition of the standard(s) evaluated.

Compliance of the assembly described in this Design Listing with the referenced standard relies on verification that the assembly constructed in the field is consistent with that described herein. Intertek certified products may be verified by the approved Intertek label; other products must be verified by the Authority Having Jurisdiction as meeting the specifications stated herein.

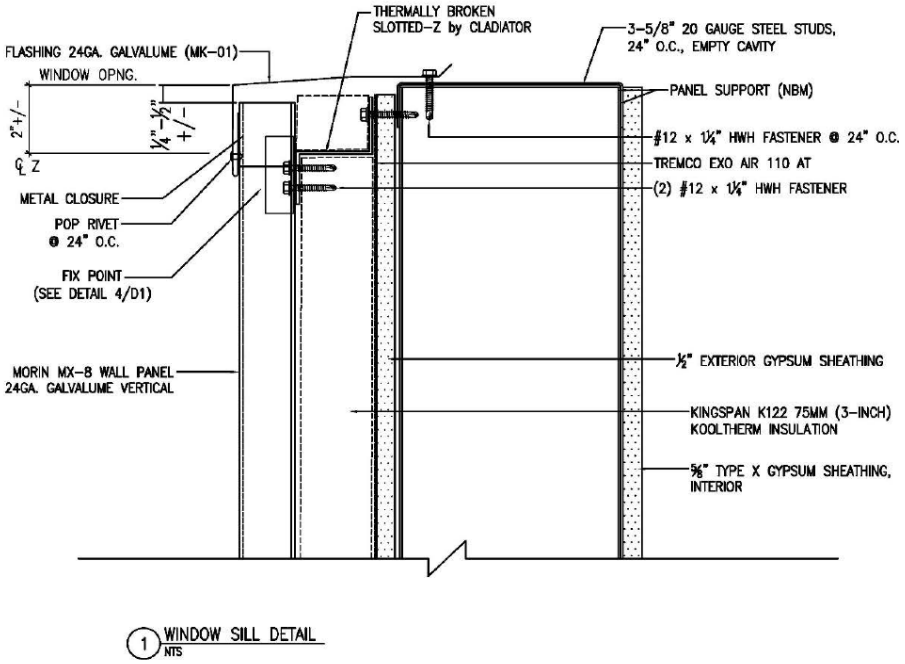

Figure 2 – Typical Window Sill Detail

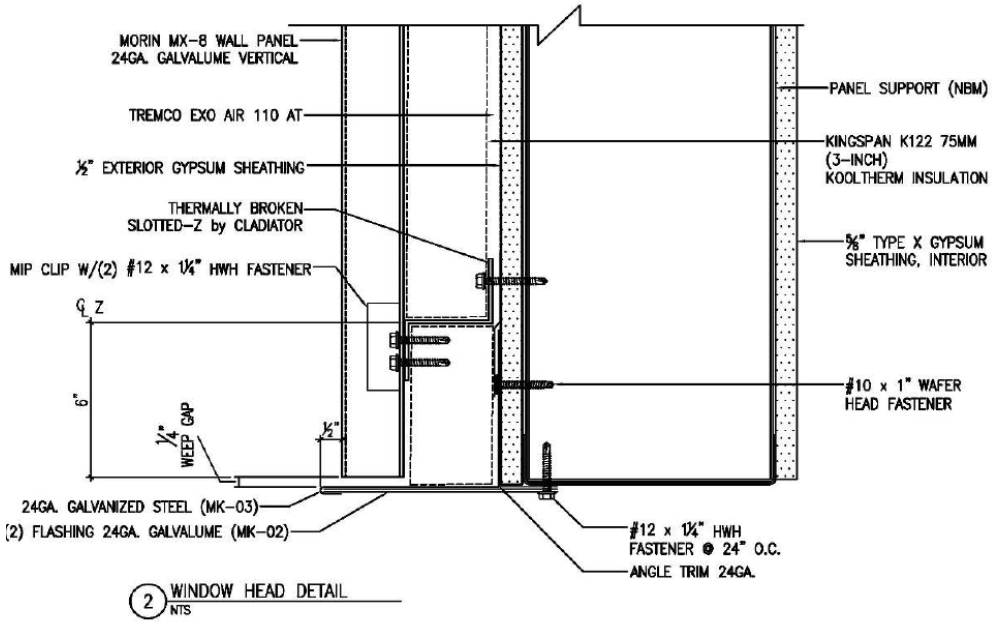

Figure 3 – Typical Window Head Detail

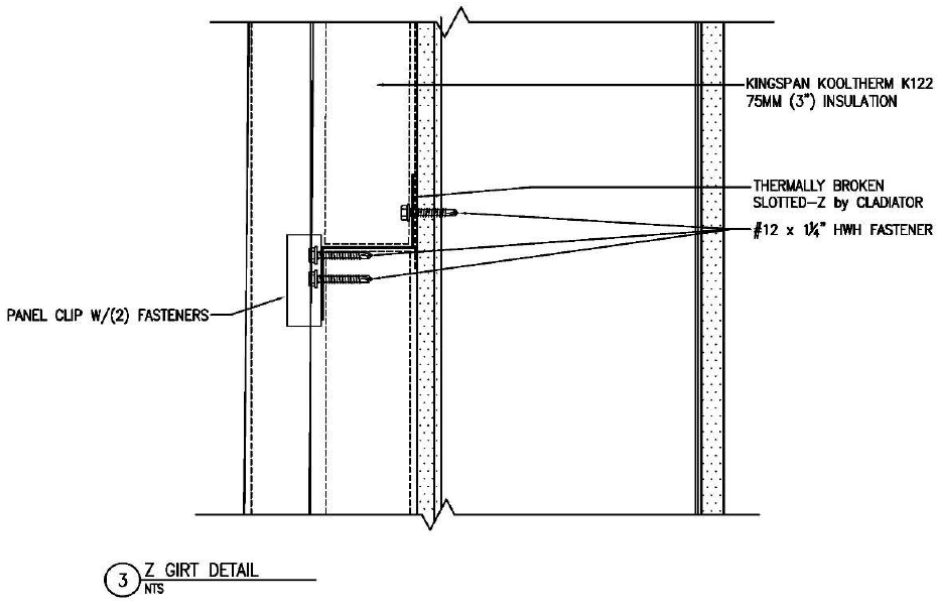

Figure 4 – Typical Slotted-Z Detail

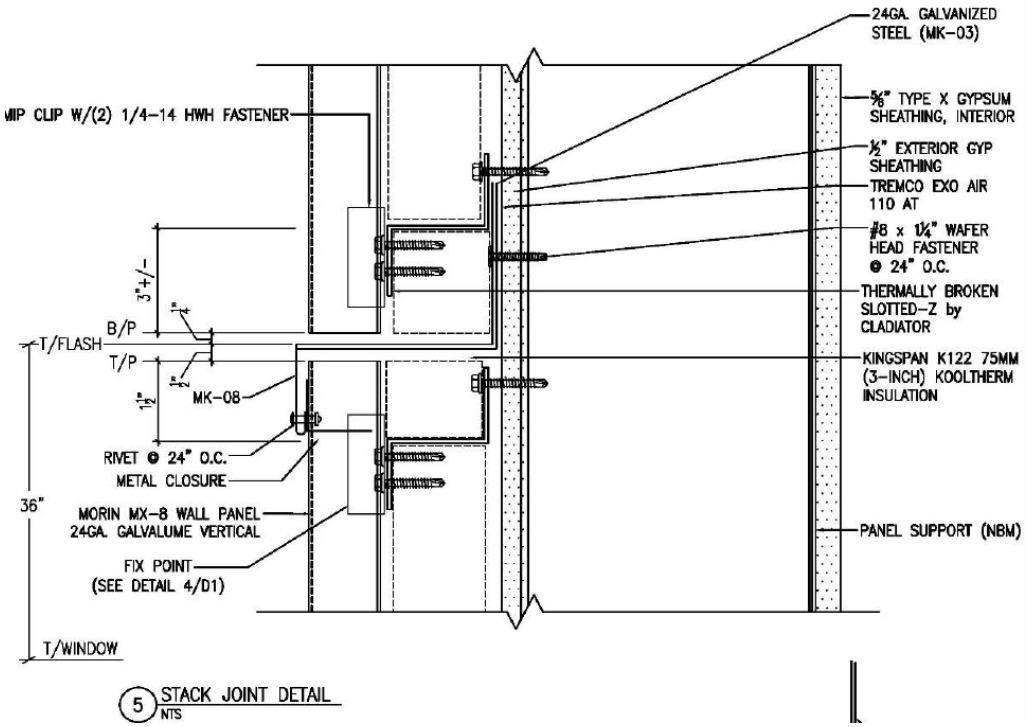

Figure 5 – Typical Stack Joint Detail

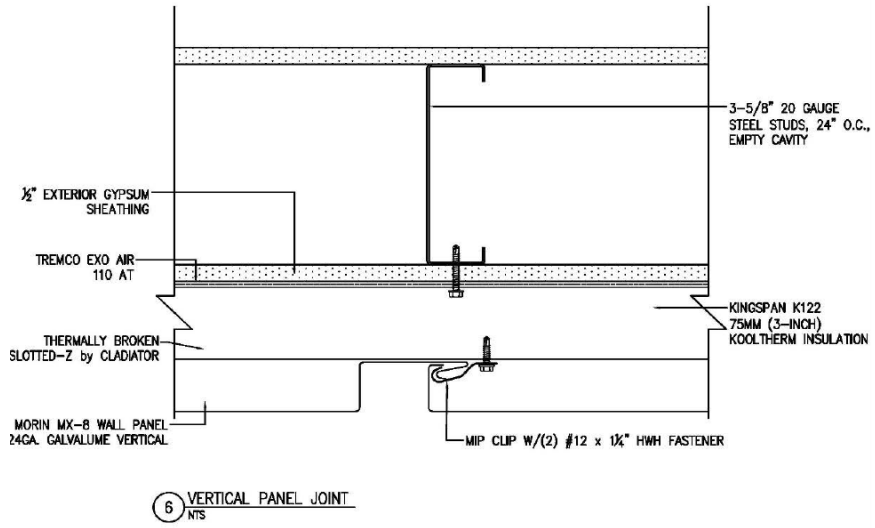

Figure 6 – Typical Vertical Panel Joint Detail

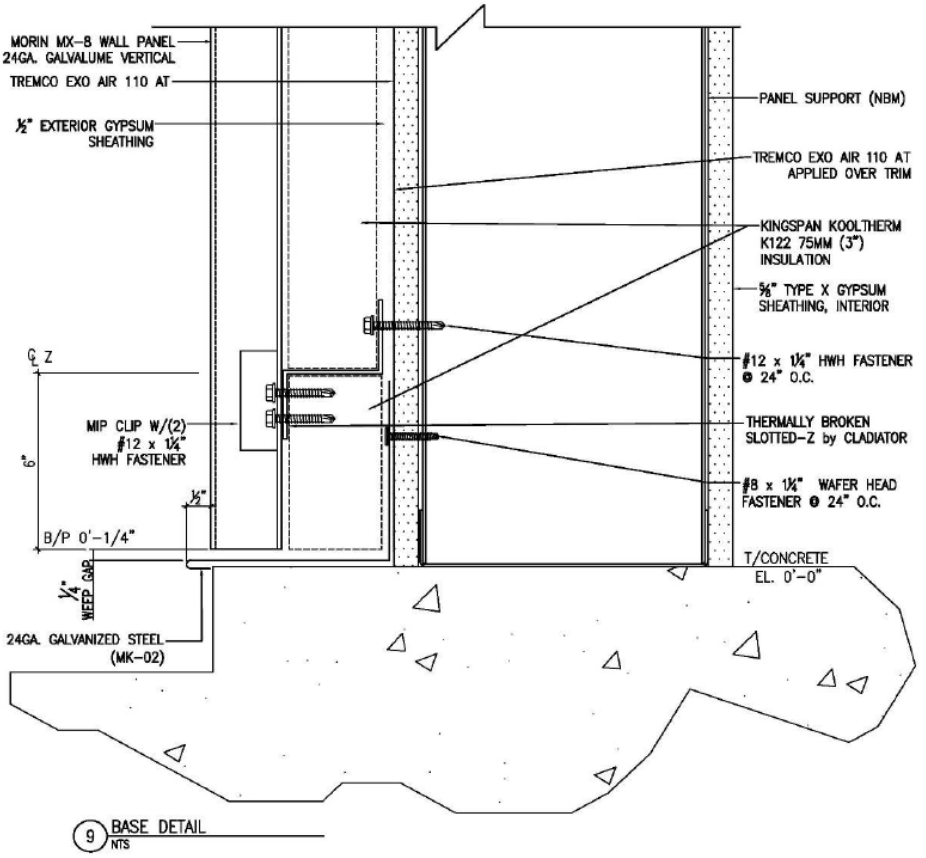

Figure 7 – Typical Base Detail

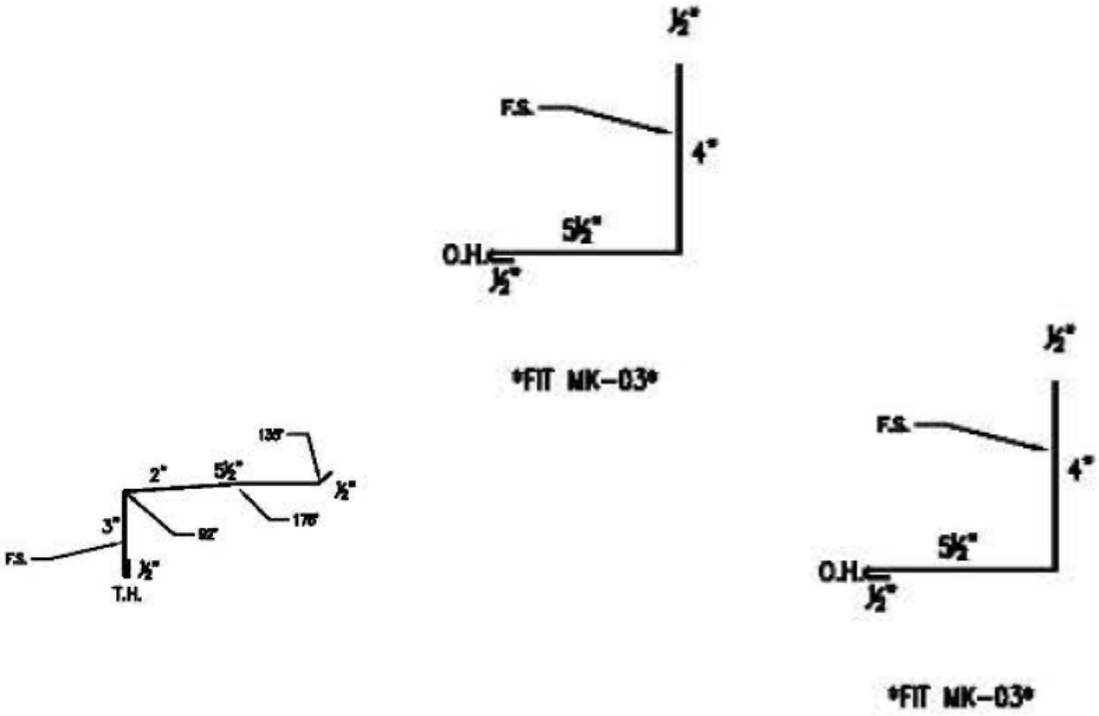

Figure 8 – Flashing Profiles