James Hardie Building Products
JH/FCS 60-04
James Hardie Fiber Cement Siding
ASTM E119, CAN/ULC S101
Non-Symmetrical, 1 Hour Load-Bearing Wall Assembly
Full Design Load per ASTM E119, 92% Design Load per CAN/ULC S101
(Rating applies to both sides)

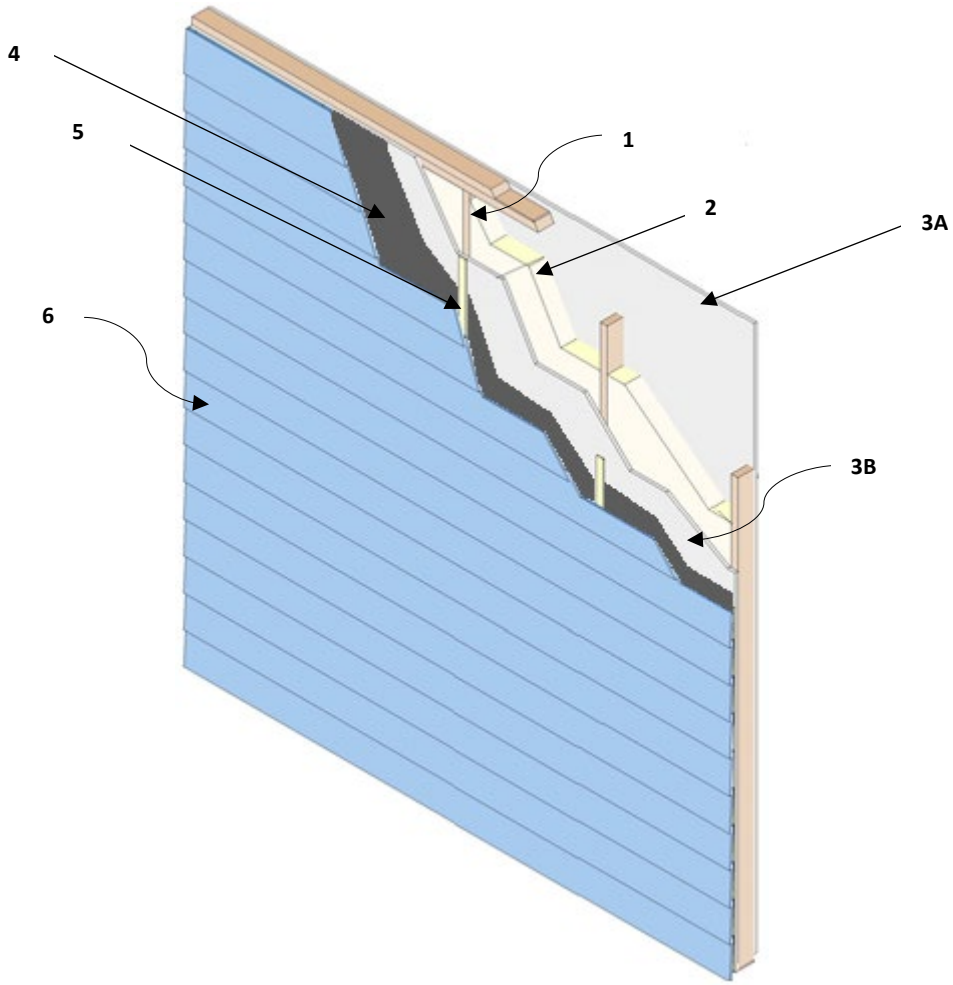

1. **WOOD STUDS:** Nominal 2 in. × 4 in. solid sawn wood studs located 24 in. on center (oc), with two top plates and a single bottom plate.

2. **CAVITY INSULATION (Optional):** R13 glass fiber batt insulation.

3. **GYPSUM WALLBOARD, SIDE A:** 5/8 in. Type X gypsum wallboard, oriented vertically and fastened with 1-3/4 in. cup-head gypsum nails, spaced 7 in. oc at board edges and in field areas, or 1-1/2 in. Type S drywall screws, spaced 8 in. oc at board edges and in field areas of boards.

GYPSUM SHEATHING, SIDE B: 1/2 in. Type X or 5/8 in. Type X gypsum sheathing fastened with 1-3/4 in. long roofing nails spaced 7 in. oc. Sheathing edge joints shall be staggered from those on opposite sides of the wall.

4. **ADDITIONAL LAYER(S) (Optional):** Any one or two of the following components can be used in any order outward of the gypsum sheathing (Item 3B):

   COMPONENT 1 – EXTERIOR INSULATION: The exterior insulation may be installed up to the max. thickness and density recognized in the certification document.
   - ICC-ES AC377 certified open cell, spray-applied polyurethane insulation
   - ASTM C578 certified extruded polystyrene (XPS) insulation
   - ASTM C1289 certified polyiso insulation
   - Mineral wool batt insulation

   COMPONENT 2 – WOOD STRUCTURAL PANEL SHEATHING:
   - Code prescribed wood structural panel sheathing

   One layer of the Wood Structural Panel Sheathing may also be installed on the interior of Item 3B.

5. **FURRING (Optional):**
   - Min. 1-1/2 in. wide × 3/8 in. thick furring (Wood: Min. 0.42 s.g.; Metal: Corrosion Resistant min. 20 GA 33 ksi metal hat channel, z-girt or u-bar), or
   - Min. 4.574 in. wide × 3/4 in. thick James Hardie Horizontal Steel Furring installed per manufacturer's installation instructions (min. 18 GA 33 ksi metal)

6. **CERTIFIED MANUFACTURER:** James Hardie Building Products Inc.

   CERTIFIED PRODUCT: HardiePlank® smooth and textured Lap Siding (HZ5 and HZ10), CemPlank® Lap Siding, Prevail® Lap Siding, HardieShingle® smooth and textured (HZ5 and HZ10), Artisan® Shingle, HardiePanel® Vertical Siding smooth and textured (HZ5 and HZ10), CemPanel® Vertical Siding, Prevail™ Panel Siding, Artisan® Lap Siding, Artisan® V-Groove Siding, Artisan® Bevel Channel, Artisan® Square Channel, Artisan® Shiplap Lap Siding, Reveal®, Hardie® Architectural Panels (textured/nontextured, HZ5/HZ10), Pressed Reveal®, and Hardie® Plank VL smooth and textured sidings.

   FIBRE CEMENT EXTERIOR SIDING: HardiePlank® smooth and textured Lap Siding (HZ5 and HZ10), CemPlank® Lap Siding, Prevail® Lap Siding, HardieShingle® smooth and textured (HZ5 and HZ10), Artisan® Shingle, HardiePanel® Vertical Siding smooth and textured (HZ5 and HZ10), CemPanel® Vertical Siding, Prevail™ Panel Siding, Artisan® Lap Siding, Artisan® V-Groove Siding, Artisan® Bevel Channel, Artisan® Square Channel, Artisan® Shiplap Lap Siding, Reveal®, Hardie® Architectural Panels (textured/ nontextured, HZ5/HZ10), Pressed Reveal®, or Hardie® Plank VL smooth and textured sidings, installed in accordance with manufacturer's installation instructions.

Consult the listing report on the Directory of Building Products (https://bpdirectory.intertek.com) for the edition of the standard(s) evaluated.

Compliance of the assembly described in this Design Listing with the referenced standard relies on verification that the assembly constructed in the field is consistent with that described herein. Intertek certified products may be verified by the approved Intertek label; other products must be verified by the Authority Having Jurisdiction as meeting the specifications stated herein.