3M Company
Design No. 3M/PV 120-01
Through Penetration
3M™ Fire Barrier Ultra PPD
3M™ Fire Barrier Ultra RC Pack
3M™ Ultrafast™ Anchors
3M™ Fire Barrier Ultra GS Wrap Strip
3M™ Fire Barrier RC-1 Collar
3M™ Fire Barrier IC 15WB+
3M™ Fire Barrier CP 25WB+
3M™ Fire Barrier 3000WT
3M™ FireDam 150+

CAN/ULC-S115, ASTM E814
Rating: See Table 1
Pressure Differential: Positive, 50 Pa (0.20 in. w.g.)

TABLE 1. RATINGS

		CAN/ULC-S115	ASTM E814
Penetrating Item	Pipe Size	F, FT, FH, FTH	F, T
PVC	1-1/2 in. to 4 in.	1 & 2 Hr	1 & 2 Hr
System XFR	1-1/2 in. to 4 in.	1 & 2 Hr	1 & 2 Hr
CPVC	1-1/2 in. to 4 in.	1 & 2 Hr	1 & 2 Hr
ccABS	1-1/2 in. to 4 in.	1 & 2 Hr	1 & 2 Hr
ABS	1-1/2 in. to 4 in.	1 & 2 Hr	1 & 2 Hr
FRPP	1-1/2 in. to 4 in.	1 & 2 Hr	1 & 2 Hr
PVC – Thin Wall	2 in.	1 & 2 Hr	1 & 2 Hr
PVDF	1-1/2 in. to 4 in.	F: 1 & 2 Hr FT: 0 Hr	F: 1 & 2 Hr T: 0 Hr

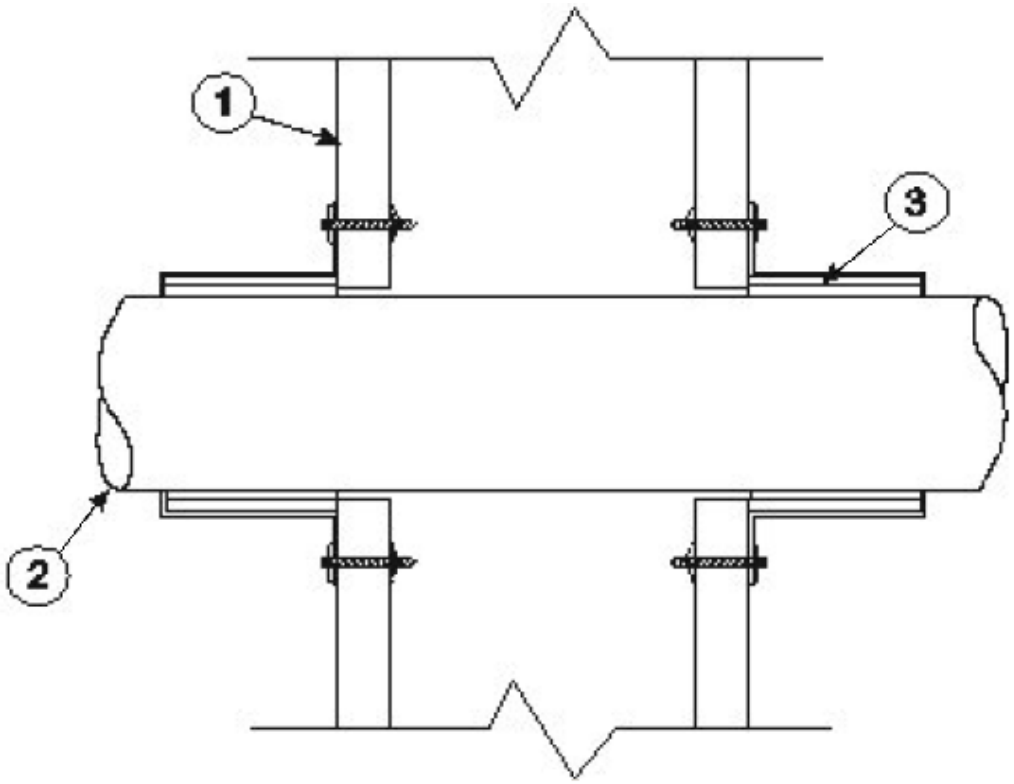

Figure 1. Penetration Detail

1. **WALL ASSEMBLY:** Code conforming 1- or 2-hour fire-rated wall, metal or wood framed gypsum wallboard, wall assembly.

2. **PENETRATING ITEMS:** (See Table 1) Nominal 4-in. diameter, Schedule 40, ccABS, ABS, PVC, System XFR, CPVC, FRPP, PVDF pipes for use in DWV (Drain, Waste & Vent) or Closed (Process & Supply) piping systems and PVC – Thin Wall Vacuum tubing (nominal 2-in. diameter). Install with maximum 1/4-in. annular space. Ratings achieved will equal that of the wall assembly (Item 1).

3. **FIRESTOP SYSTEM COMPONENTS:**
   a) **Certified Products: 3M™ Fire Barrier Ultra PPD or 3M™ Fire Barrier Ultra RC Pack:** Device sized appropriately for pipe, secured to wall surface with Intertek-Certified 3M™ Ultrafast™ Anchors or 3/16-in. diameter steel toggle bolts (5/8-in. to 1-1/4-in. grip) in conjunction with minimum 1-1/2-in. diameter steel washers.

      Use 3M™ Fire Barrier Ultra PPD 1.5 for 2-in. PVC – Thin Wall Vacuum Tubing.

Certified Products: 3M™ Fire Barrier Ultra GS Wrap Strip in 3M™ Fire Barrier RC-1 Collar: (Not Shown) Use nominal 1/8-in. thick, 2-in. wide 3M™ Fire Barrier Ultra GS Wrap Strip and nominal 2-in. wide 3M™ Fire Barrier RC-1 Collar as an alternative to 3M™ Fire Barrier Ultra PPD. Install the wrap strip tightly around pipe continuously with the same number of layers as required for 3M™ Fire Barrier Ultra PPD. Butt the wrap strips tightly against wall surface. Use aluminum foil tape, steel wire tie, or equivalent to hold wrap strip in place temporarily. Use 3M™ Fire Barrier RC-1 collar to retain the wrap strip. Bend the anchor tabs outward 90 degrees and install the collar tightly around the wrap strip with 1-in. overlap at the ends. Anchor tabs to be pressed tightly against wall surfaces, and collar to be compressed around wrap strip layers, secured with 1/2-in. wide stainless steel hose clamp at the middle of the collar. Fasten the collar tabs to both sides of wall as specified for the 3M™ Fire Barrier RC-1 Collar.

Anchors

Certified Products: 3M™ Ultrafast™ Anchors

Table 2. 3M™ Fire Barrier Ultra PPD Size Chart

Device	Ultra GS Wrap Layers	Nominal Pipe Size	Max. Hole Size
PPD 1.5	1	1-1/2 in.	2-1/2 in.
PPD 2.0	1	2 in.	3 in.
PPD 3.0	2	3 in.	4 in.
PPD 4.0	3	4 in.	5 in.

Table 2. 3M™ Fire Barrier Ultra RC Pack Size Chart

Device	Ultra GS Wrap Layers	Nominal Pipe Size	Max. Hole Size
RC Pack 2	1	2 in.	3 in.
RC Pack 3	2	3 in.	4 in.
RC Pack 4	3	4 in.	5 in.

b) CAULK (Optional):

Certified Products: Sealant

- **3M™ Fire Barrier CP 25WB+**
- **3M™ Fire Barrier IC 15WB+**
- **3M™ Fire Barrier 3000WT**
- **3M™ FireDam FD-150**

Fill the annular space at the pipe penetration as a smoke seal.

Note: Check the CPVC manufacturers' compatibility list before applying any 3M Fire Protection Products to a system which includes CPVC pipes.

This Design Listing is intended to provide guidance for on-site verification of the installation of system components and shall not be used in place of the manufacturer's published installation instructions. The manufacturer is responsible for providing installation instructions and requirements that ensure compliance with the system as tested and evaluated by Intertek. Installation must comply with this Design Listing, the manufacturer's installation instructions, and the applicable Code. In the event of conflict, this Design Listing governs.

Compliance of the assembly described in this Design Listing with the referenced standard(s) is contingent upon verification that the field-constructed assembly is consistent with the assembly described herein. Intertek-certified products may be verified by the authorized Intertek label. Products not bearing the Intertek label shall be verified by the Authority Having Jurisdiction as meeting the specifications stated herein.

This Design Listing is provided pursuant to the agreement between Intertek and its Client. Intertek's responsibility and liability are limited to the terms and conditions of that agreement. Intertek assumes no liability to any party other than the Client, in accordance with the agreement, for any loss, expense, or damage arising from the use of this document. Only the Client is authorized to permit copying or distribution of this Design Listing, and only in its entirety. Partial reproduction or distribution of excerpts is not permitted.

Refer to the listing report in the Directory of Building Products (https://bpdirectory.intertek.com) for the applicable edition of the referenced standard(s)